HB77 TECHNICAL SHEET
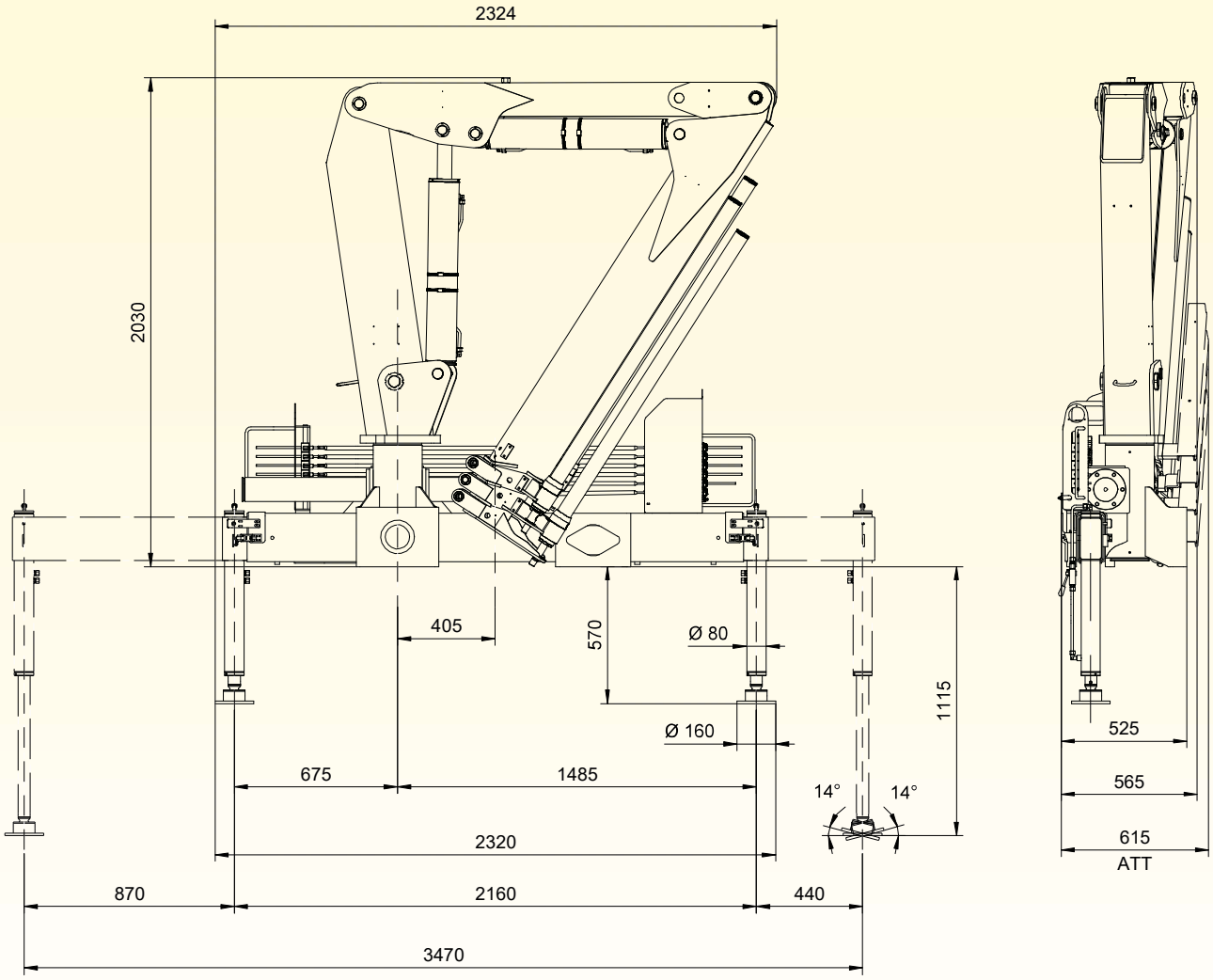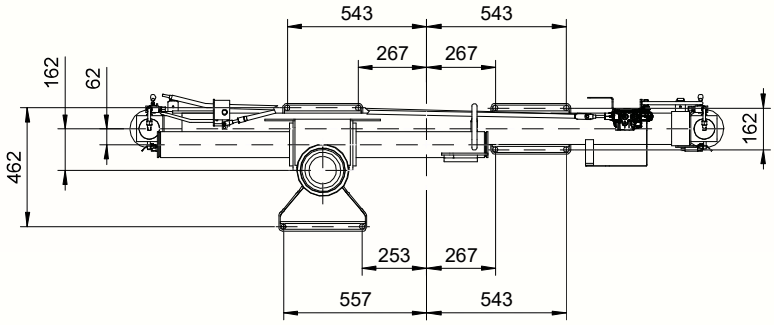
DIMENSIONS WITH CE LEGS